5-1. THE EXPLODED VIEW OF TOP COVER ASSEMBLY

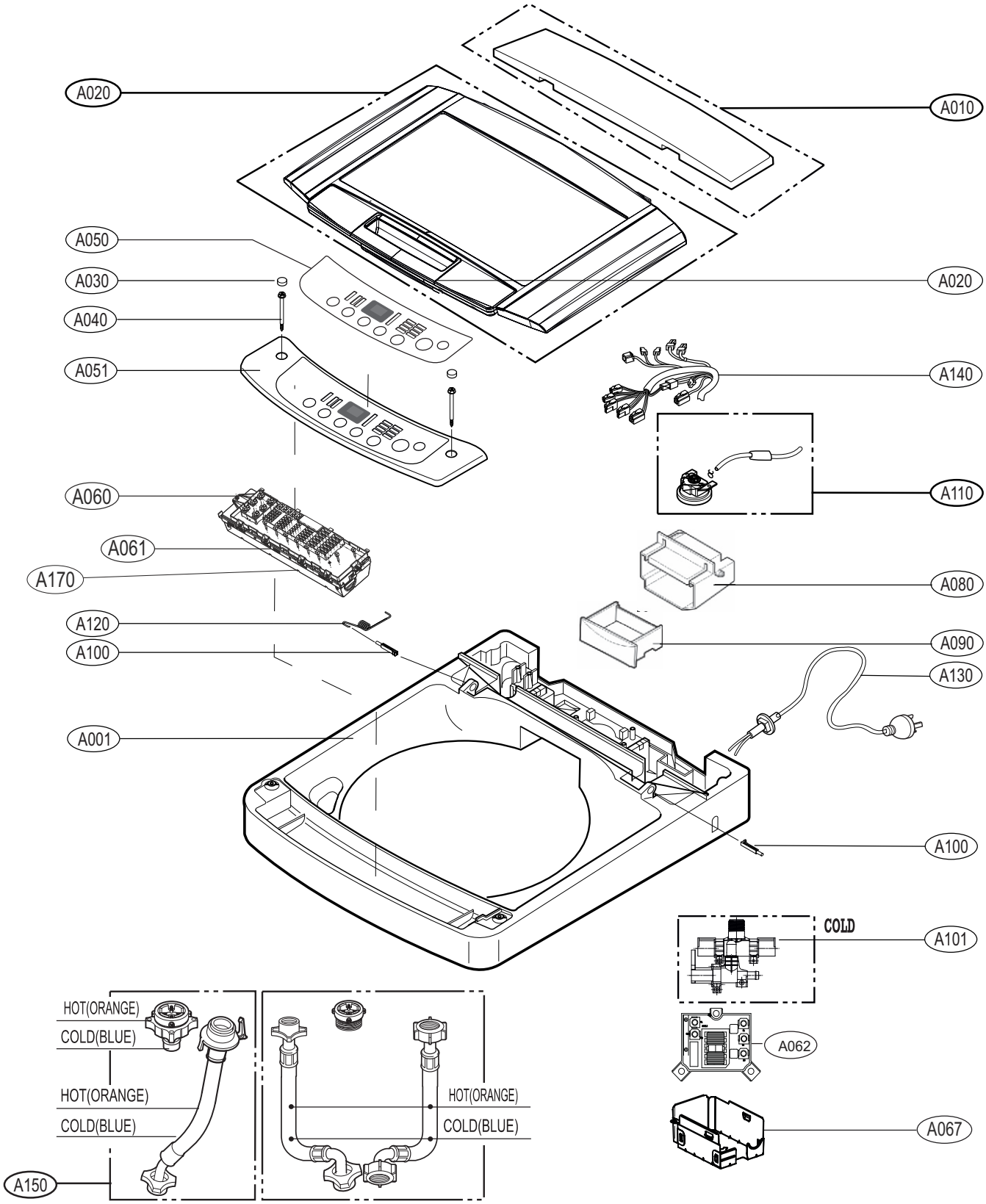

5-2. THE EXPLODED VIEW OF OUT CASE ASSEMBLY

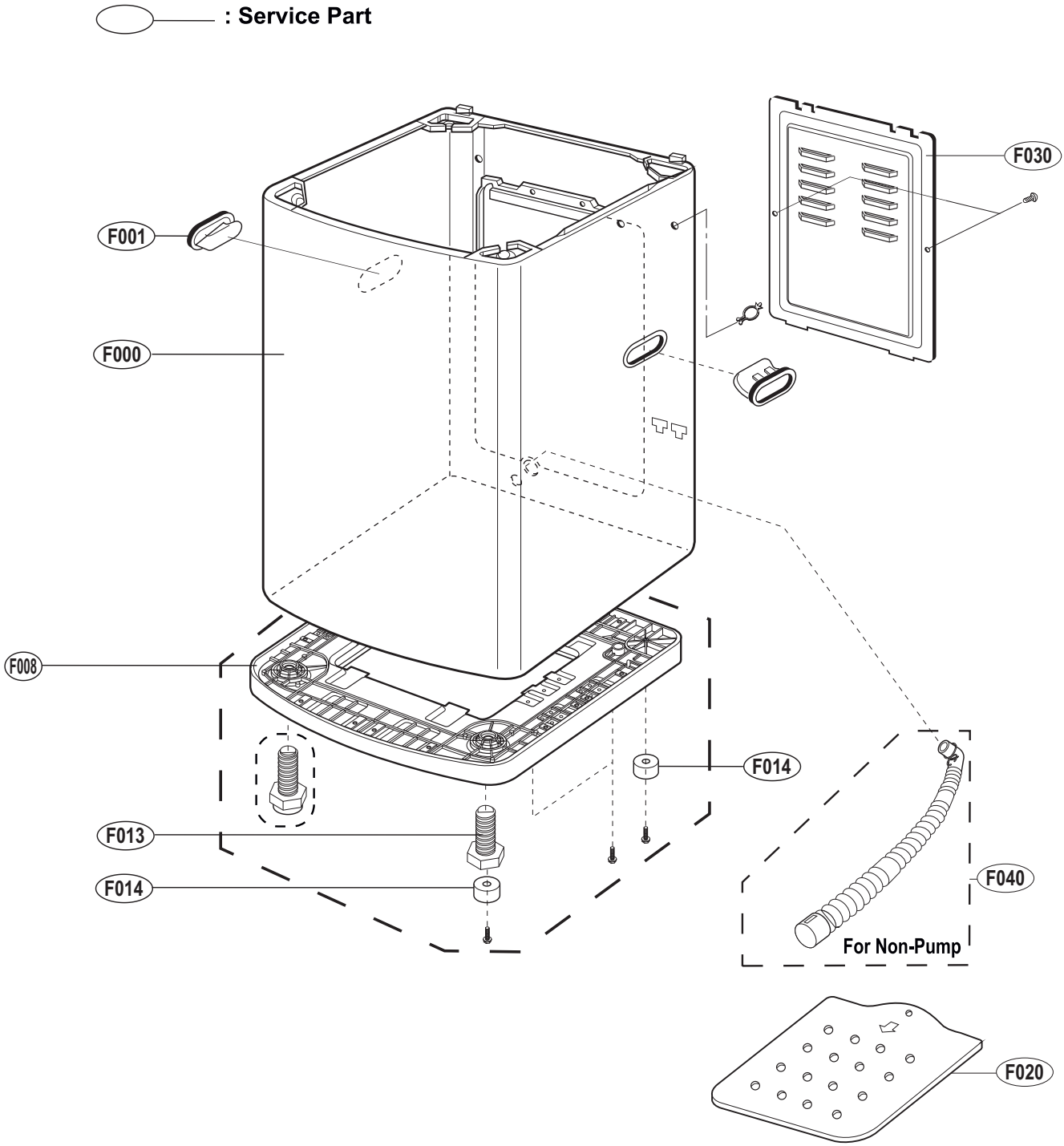
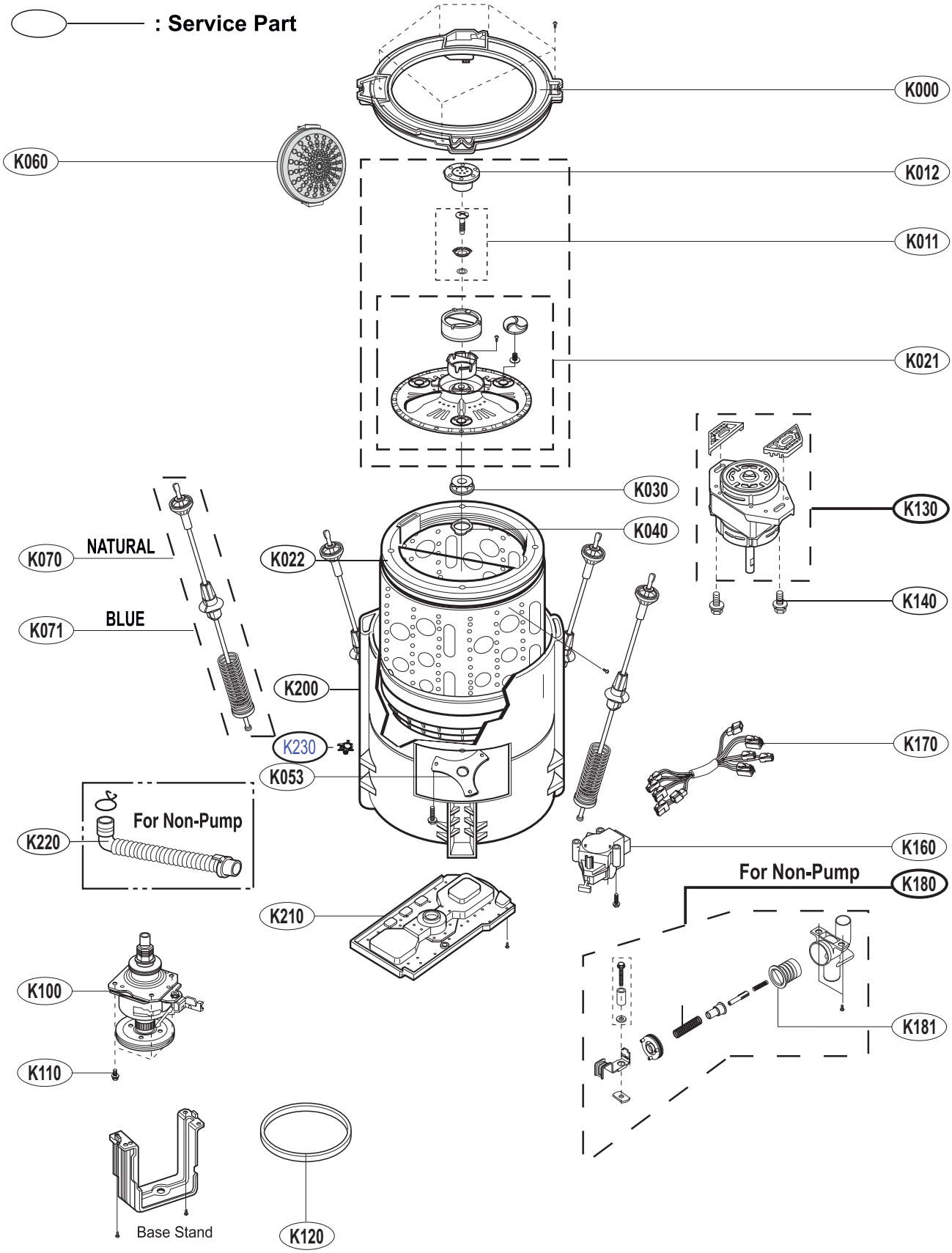
5-3. THE EXPLODED VIEW OF TUB ASSEMBLY